FRANKE



COLLECTIONS

2026·2027



Scan to see our
brand campaign.

FRANKE

COLLECTIONS 2026·2027

PRODUCT CATEGORIES

14 - 53	Sinks & Bowls
14 - 25	Fragranite Sinks & Bowls
29 - 39	Stainless Steel Inset Sinks & Bowls
41 - 49	Stainless Steel Undermount Bowls
51 - 53	Stainless Steel Drop-on Sinks
54 - 73	Taps
73	Soap Dispenser
76- 79	Waste Management & Accessories
80- 81	Wash Troughs
82 - 84	Cleaning & Maintenance
85	Warranties & Disclaimer









Years of experience, yet still as curious as kids.

At Franke, we have been looking for new solutions and innovations for over 100 years and our attitude still has not changed. In 1911 we combined traditional craftsmanship, precision engineering and a constant pursuit of innovation, three principles that remain at our core.

A story forged in Swiss precision

Our story began at the beginning of the last century as a small sheet-metal business in Rorschach, Switzerland, established by Hermann Franke. Since then, we opened up to the world and inaugurated manufacturing facilities all around the globe that led us to become leaders in the kitchen sinks segment, and home solutions altogether.



The recipe for a healthier future

We're on a mission to help create a more sustainable planet, one innovation at a time. From designs built with the use of sustainable materials, to efficiency optimization and waste reduction, we act responsibly throughout our business and beyond for positive long-term impact.



Taking care of the environment

Franke joined the United Nations Global Compact and adopted the Ten Principles of the United Nations Global Compact for sustainable and responsible business in 2011 and has reported on its material sustainability impacts annually since.

By 2050, we hope to have achieved Net Zero emissions throughout the entire production chain and from localized actions we're already on target with our company CO_2 emissions falling 10% annually since 2016.

Our eco-conscious attitude doesn't stop with emissions; we're forever evolving our manufacturing processes to reduce impact on the environment and lead by example.

Resources

59% of electric consumption in 2022 came from renewable energy, 6% of which was created by solar energy generated on Franke owned sites.

Water consumption decreased by 18.6% in 2022.

Franke Group's consumption of natural gas reduced by 17.5% in 2022.

Waste

75% of waste created in 2022 was reused or recycled.

Packaging

Franke has switched from Styrofoam to cardboard packaging for its range of granite and tectonite sinks.

91% of Franke packaging is made from renewable materials.

Nurturing our people and society

The health of our people and communities is just as important as our planet. That's why we provide leadership training courses throughout our company and aim to make this available for every employee by 2030. We also partner with national and international organizations, volunteering where possible in support of social issues.

"We have invested in more solar PV systems, with the capacity to generate around 2,500,000 kWh annually"

Patrik Wohlhauser, Franke CEO

Innovation for sustainable living

Our eco-friendly innovations are designed to empower cleaner living at home and inspire everyday wellbeing.

Taps

Stainless steel models are made of 100% recyclable steel. The Franke Neptune Clear Water filtration system provides filtered water directly from the tap therefore reducing the need for bottled water.





Sinks

Franke's sinks ranges are exemplary in terms of usage of sustainable materials such as stainless steel, Fragranite and Tectonite that guarantee extraordinary product durability, resistance and long-lasting quality.



Show what you're made of!

Shiny or matte; smooth or stone-like, extra-strong or super trendy. Your kitchen can speak volumes about you, so every detail counts. To offer you the chance to create your very own perfect kitchen, our range of materials is designed to please any taste, match any style and resist any endeavor. Discover each material's precision-engineered character and unique benefits to choose the one that suits your needs the best and you like the most.

Brushed

Polished



Stainless Steel

Whether you prefer the more reflective qualities of the polished finish or the more subtle look of the silk or brushed finishes, which give a more matt sheen, there is a Stainless Steel solution for you. Any Franke Stainless Steel product is made from premium quality chrome nickel steel, which looks stunning and is highly resistant to staining, rust and corrosion - plus it won't chip, craze, flake, or break. If Stainless Steel is one of the most popular materials in the kitchen, it's for good reason.





Reversible Sink



Inset Sink



Undermount Sink



Drop On Sink



FastFix Clips



Matte Black

Onyx

Stone Grey

Polar White

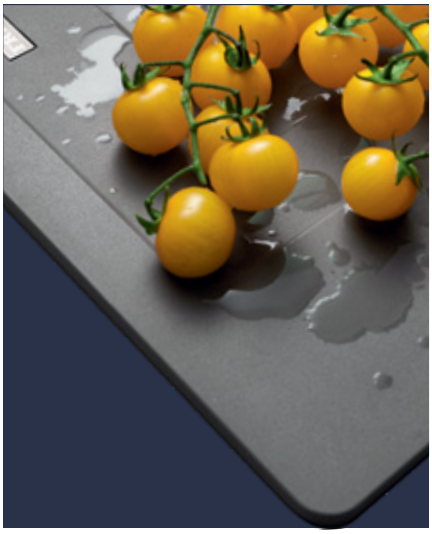

Fragranite

An exceptionally tough material, highly resistant to burns, dents, chips and stains. Pioneered by Franke, it's a unique material with a subtle sheen that is warm to the touch thanks to its close to 80% composition of quartz sand. The surface is finely textured ensuring high hygiene standards.

PVD Coating

PVD, standing for 'Physical Vapor Deposition', is a coating technology that makes Stainless Steel tapware even more resistant to abrasions, scratches and corrosion and offers exceptional aesthetic features as well. A tap treated with a PDV coating even resists UV rays and makes fingerprints less visible in a busy kitchen. There are now an array of other stunning finishes to choose from: Anthracite, Copper and Gold, you really can find something to suit every style of kitchen.

PVD



Copper

Gold

Anthracite


FRANKE



Quality
in shining armour.

Beautiful and made for real-life use. Steel represents our kitchen ideal.

The sheer quality of Franke products can be seen and felt. We use AISI 304 18/10 steel, which is produced in Italy and Europe: a choice that reflects our dedication to quality, one of our core priorities over the 100-plus years of our history.

Strong and robust, it maintains its brilliance over time, making it the defining feature of the living spaces in which it is installed.

Its superb technical features ensure that it is always in demand, and highly appreciated by professionals in the haute cuisine sector: furthermore, stainless steel is an extremely hygienic material, and is easy to clean and recyclable. Aesthetically pleasing and functional to use: stainless steel really represents quality in shining armour.

Durable

The specific concentrations of nickel and chrome in AISI 304 18/10 steel render it particularly resistant to extreme temperatures. Its brilliance does not fade over time; on the contrary, its beauty and appeal only increase.

Easy to maintain

Steel is easy to maintain; just a few simple daily steps ensure that it remains a joy to use over time. Skip to the next page for tips on how to take care of Franke steel.

Functional

Steel is the material of choice for kitchen professionals, due to the fact that it is resistant, hygienic and safe. Its non-porous surface is extremely easy to clean.

Sustainable and ecological

An environmentally friendly material that is 100% recyclable, can be sourced from scrap materials, and produced without toxic waste.

Fragranite

Sin



16 - 17 Maris Double Bowl Sinks

18 - 23 Maris Bowls

24 - 25 Ronda Prep Bowls

nks & Bowls



Maris Double Bowl Sinks





Maris MRG621 Polar White

Sink Dimensions: 1160L x 500W mm
Bowl Dimensions: 335L x 425W x 200D mm
Cut-Out Dimensions: 1140x480
Product Code: 1990073

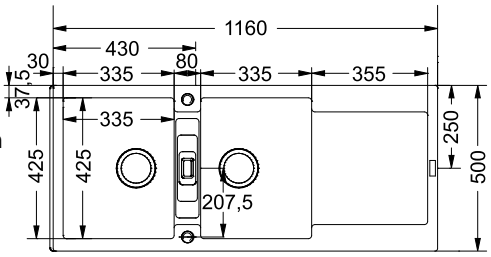



Maris MRG621 Matt Black

Sink Dimensions: 1160L x 500W mm
Bowl Dimensions: 335L x 425W x 200D mm
Cut-Out Dimensions: 1140x480
Product Code: 1990134

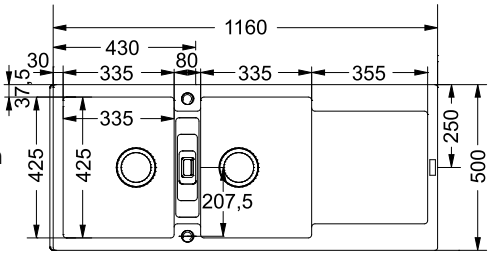



Maris MRG621 Stone Grey

Sink Dimensions: 1160L x 500W mm
Bowl Dimensions: 335L x 425W x 200D mm
Cut-Out Dimensions: 1140x480
Product Code: 1990072

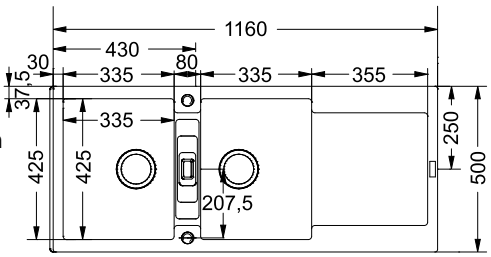

SUGGESTED ACCESSORIES



Stainless Steel Roll Mat
Product Code: 1120190

Maris Bowls

Spectacularly Big



THE MARIS FRAGRANITE BOWL IS VERY MINIMALIST

Our Maris bowls are not only an attraction in the kitchen, they just perfectly fit. No matter how your kitchen is furnished, with us you will find the right colour and the right model. A minimalist product for everyday use and easy maintenance.

The Maris Fragranite Bowl meets all the requirements for modern kitchen use. But above all, Maris is spectacularly big. With no drainer, washing baking trays, pots and pans has never been easier.



A match with your kitchen

The Maris Fragranite bowl is the ultimate improvement to your kitchen. Our products offer modern looks, clever functions and plenty of space – they combine design and functionality. With a Maris bowl you have a product that simply fits and creates a lot of pleasure and convenience.



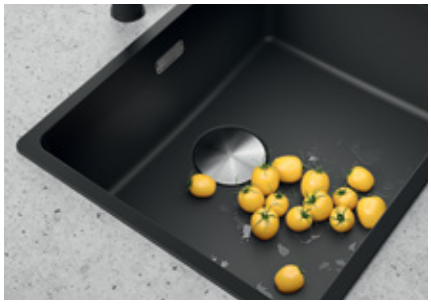

Delightfully long-lasting

The bowl includes quartz, one of the hardest materials known to man, and is resistant to temperatures up to 280° C*. It's also resilient to impact and thermal shock, and so scratch-resistant that even knives won't leave marks on the surface.

*180° up to 30 minutes, 280° up to 10 seconds

Fragranite

An exceptionally tough material, highly resistant to burns, dents, chips and stains.

Pioneered by Franke, it's a unique material with a subtle sheen that is warm to the touch thanks to its close to 80% of quartz sand.

The surface is finely textured ensuring high hygiene standards.





Maris MRG610-37 Polar White

Sink Dimensions: 410L x 440W mm
Bowl Dimensions: 370L x 400W x 200D mm
Product Code: 1990119

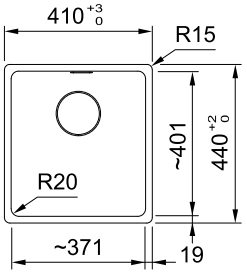



Maris MRG610-52 Polar White

Sink Dimensions: 560L x 440W mm
Bowl Dimensions: 520L x 400W x 200D mm
Product Code: 1990120

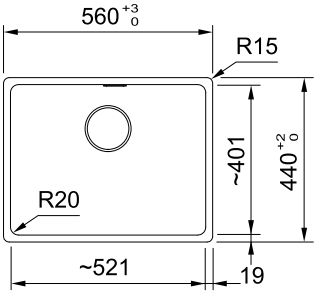



Maris MRG610-72 Polar White

Sink Dimensions: 760L x 440W mm
Bowl Dimensions: 720L x 400W x 200D mm
Product Code: 1990121

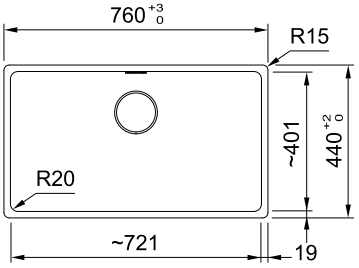



Maris MRG620-35-35 Polar White

Sink Dimensions: 760L x 440W mm
Bowl Dimensions: 346/346L x 400W x 200D mm
Product Code: 1990122

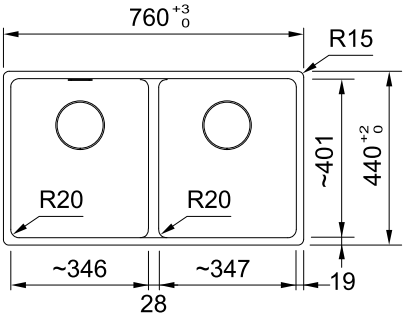



Maris MRG610-37 Matte Black

Sink Dimensions: 410L x 440W mm
Bowl Dimensions: 370L x 400W x 200D mm
Product Code: 1990115

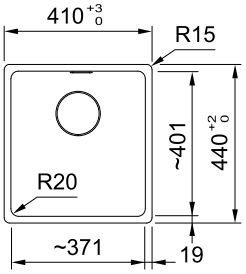



Maris MRG610-52 Matte Black

Sink Dimensions: 560L x 440W mm
Bowl Dimensions: 520L x 400W x 200D mm
Product Code: 1990116

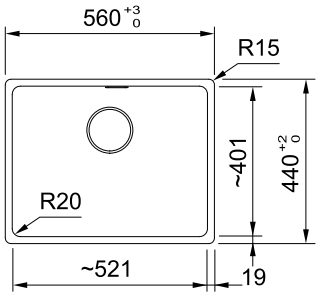



Maris MRG610-72 Matte Black

Sink Dimensions: 760L x 440W mm
Bowl Dimensions: 720L x 400W x 200D mm
Product Code: 1990117

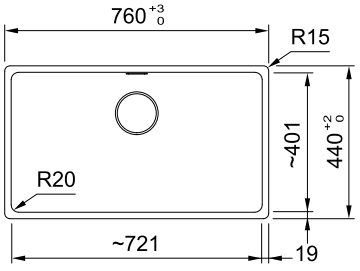



Maris MRG620-35-35 Matte Black

Sink Dimensions: 760L x 440W mm
Bowl Dimensions: 346/346L x 400W x 200D mm
Product Code: 1990118

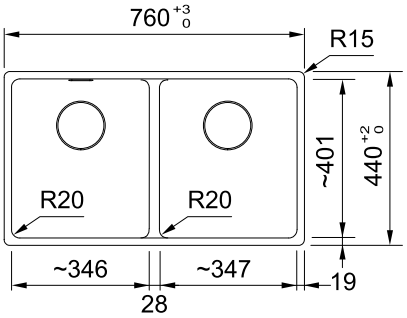



Maris MRG610-37 Stone Grey

Sink Dimensions: 410L x 440W mm
Bowl Dimensions: 370L x 400W x 200D mm
Product Code: 1990123

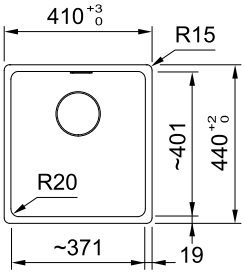



Maris MRG610-52 Stone Grey

Sink Dimensions: 560L x 440W mm
Bowl Dimensions: 520L x 400W x 200D mm
Product Code: 1990124

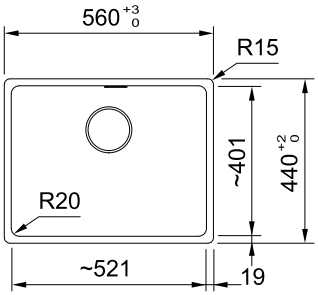



Maris MRG610-72 Stone Grey

Sink Dimensions: 760L x 440W mm
Bowl Dimensions: 720L x 400W x 200D mm
Product Code: 1990125

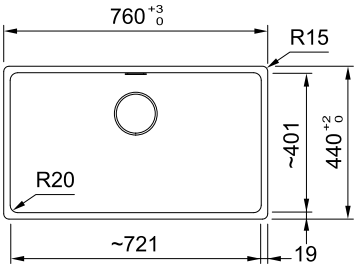



Maris MRG620-35-35 Stone Grey

Sink Dimensions: 760L x 440W mm
Bowl Dimensions: 346/346L x 400W x 200D mm
Product Code: 1990126

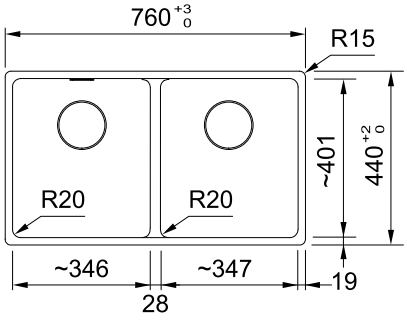

A perfectly finished bowl

Our bowls are beautifully designed minimalist objects that will blend into your kitchen and simply belong. With their extremely thin rim, they are among the most striking design bowls on the market. Moreover, the bowls are offered with a drain cover and hidden overflow.



COLOR VARIATIONS



Matte Black Stone Grey Polar White

INSTALLATION TYPES



Inset



Undermount



Inset Fast Fix, our patented fixation system.

Easy-to-install sink in a short space of time, without tools.

The inset installation system, with its Fast Fix pre-installed fixation clips, makes the installation quick, safe and simple.

Ronda
Prep Bowls





Ronda ROG610-41 Polar White

Sink Dimensions: 510Ø mm
Bowl Dimensions: 400Ø x 195D mm
Product Code: 1990081

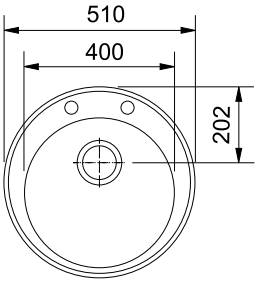



Ronda ROG610-41 Matt Black

Sink Dimensions: 510Ø mm
Bowl Dimensions: 400Ø x 195D mm
Product Code: 1990150

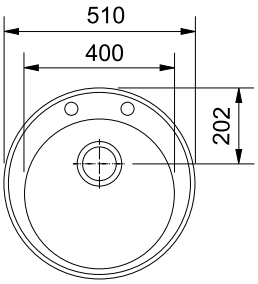



Ronda ROG610-41 Stone Grey

Sink Dimensions: 510Ø mm
Bowl Dimensions: 400Ø x 195D mm
Product Code: 1990082

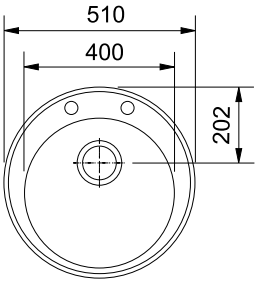

Stainless St

Sin



teel

ks &

Bowls



28 - 39 Stainless Steel Inset Sinks & Bowls

40 - 45 Stainless Steel Undermount Bowls

46 - 50 Stainless Steel Drop-on Sinks

Inset Sinks & Bowls



NEW Rapid

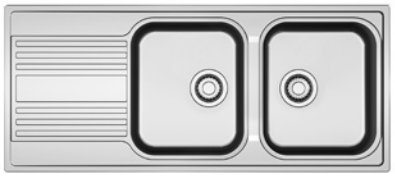

Rapid RPX621

Sink Dimensions: 1160L x 500W mm
Bowl Dimensions: 340L x 400W x 190D mm
Cut-Out Dimensions: 1140L x 480W mm
Product Code: 1990141

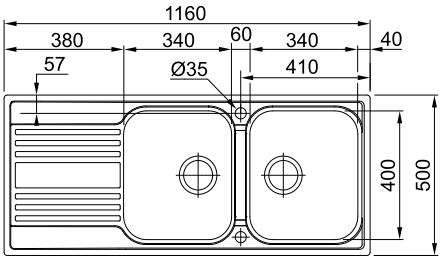

25 YEARS WARRANTY

SUGGESTED ACCESSORIES

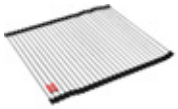

Stainless Steel Roll Mat
Product Code: 1120190



Neptune



Neptune NEX621

Sink Dimensions: 1160L x 510W mm
Bowl Dimensions: 360L x 420W x 200D mm
Cut-Out Dimensions: 1144L x 490W mm

Product Code Left Hand Drainer: 1010005
Product Code Right Hand Drainer: 1010004

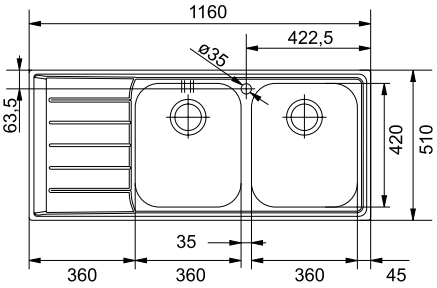

25 YEARS WARRANTY

The stylish Neptune range from Franke Europe features a wonderfully smart design to help make prepping and cleaning effortless. The 200mm deep bowls together with recessed drainer board prevent water splashing onto the work surface to keep the work area dry and hygienic. Neptune features an overflow, a pre–cut tap hole and basket strainer waste fittings.

SUGGESTED ACCESSORIES



Stainless Steel Roll Mat
Product Code: 1120190



SUGGESTED ACCESSORIES



Plastic Insert
Product Code: 1120058



Full Chopping Board
Product Code:
1120034



Stainless Steel Basket
Product Code:
1120005



Stainless Steel Drainer Tray
Product Code:1120060



Cascade CDX611

Sink Dimensions: 925L x 500W mm
Bowl Dimensions: 343L x 410W x 169D mm
Cut-Out Dimensions: 905L x 480W mm
Product Code: 1990032

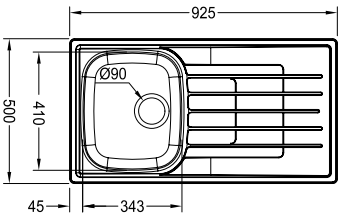



Cascade CDX651

Sink Dimensions: 925L x 500W mm
Bowl Dimensions: 343L x 410W x 171D mm
160L x 280W x 139D mm

Cut-Out Dimensions: 905L x 480W mm
Product Code: 1990033
OPTIONAL EXTRA: Plastic Insert:

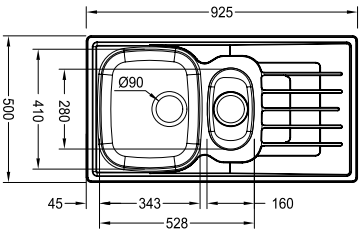



Cascade CDX621-120

Sink Dimensions: 1200L x 500W mm
Bowl Dimensions: 343L x 410W x 157D mm
Cut-Out Dimensions: 1180L x 480W mm
Product Code: 1990027

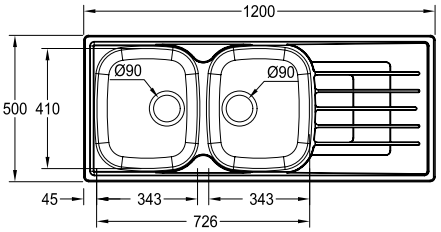



Cascade CDX671

Sink Dimensions: 1360L x 500W mm
Bowl Dimensions: 343L x 410W x 157D mm
160L x 280W x 139D mm

Cut-Out Dimensions: 1340L x 480W mm
Product Code: 1990019
OPTIONAL EXTRA: Plastic Insert:

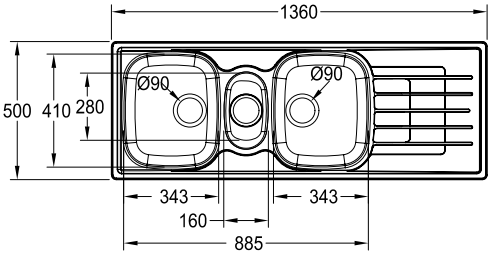

Quinline

SUGGESTED ACCESSORIES



Plastic Insert
Product Code: 1120058



Full Chopping Board
Product Code:
1120034



Stainless Steel Basket
Product Code:
1120005



Stainless Steel Drainer Tray
Product Code:1120060



Quinline QLX611

Sink Dimensions: 900L x 500W mm
Bowl Dimensions: 343L x 410W x 166D mm
Cut-Out Dimensions: Refer to template included with packaging
Product Code: 1990003

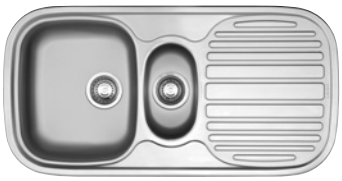

Quinline QLX651

Sink Dimensions: 970L x 500W mm
Bowl Dimensions: 343L x 410W x 179D mm
160L x 280W x 139D mm
Cut-Out Dimensions: Refer to template included with packaging
Product Code: 1990005
OPTIONAL EXTRA: Plastic Insert:



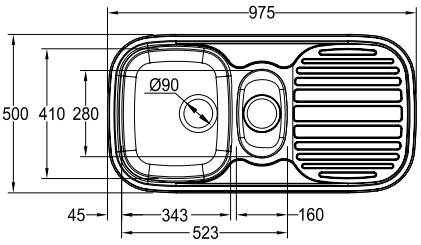

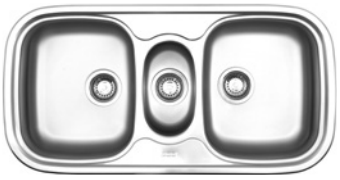

Quinline QLX670

Sink Dimensions: 970L x 500W mm
Bowl Dimensions: 343L x 410W x 157D mm
160L x 280W x 139D mm

Cut-Out Dimensions: Refer to template included with packaging
Product Code: 1990004
OPTIONAL EXTRA: Plastic Insert:



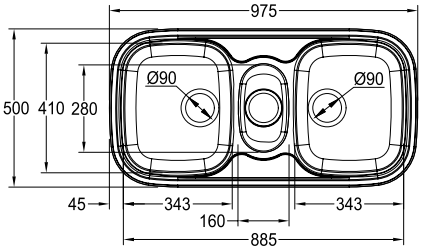



Quinline QLX621-110

Sink Dimensions: 1100L x 500W mm
Bowl Dimensions: 343L x 410W x 157D mm
323L x 315W x 131D mm

Cut-Out Dimensions: Refer to template included with packaging
Product Code: 1990006

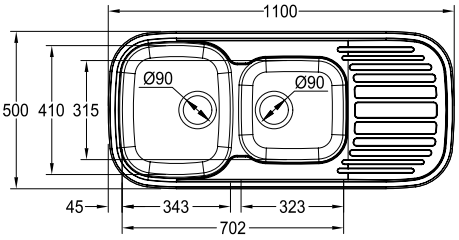



Quinline QLX621-120

Sink Dimensions: 1200L x 500W mm
Bowl Dimensions: 343L x 410W x 149D mm
Cut-Out Dimensions: Refer to template included with packaging
Product Code: 1990007

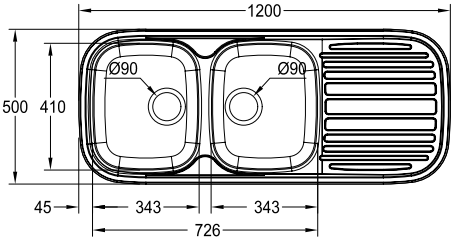



Quinline QLX622

Sink Dimensions: 1500L x 500W mm
Bowl Dimensions: 343L x 410W x 153D mm
Cut-Out Dimensions: Refer to template included with packaging
Product Code: 1990008

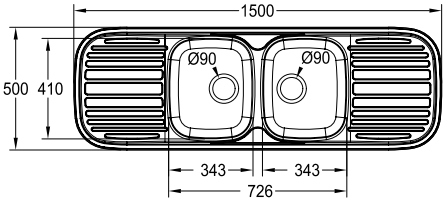

Nevada



Nevada NDN611

Sink Dimensions: 800L x 460W mm
Bowl Dimensions: 340L x 370W x 149D mm
Cut-Out Dimensions: 780L x 440W mm
Product Code: 1990144

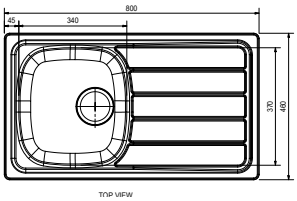



Nevada NDN621

Sink Dimensions: 1160L x 460W mm
Bowl Dimensions: 340L x 370W x 149D mm
Cut-Out Dimensions: 1140L x 440W mm
Product Code: 1990143

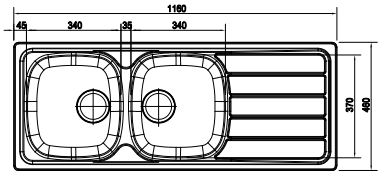

Nouveau



Nouveau NVN611

Sink Dimensions: 800L x 460W mm
Bowl Dimensions: 340L x 370W x 149D mm
Cut-Out Dimensions: 780L x 440W mm
Product Code: 1990001

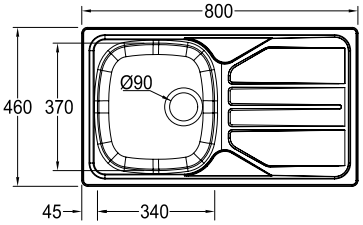



Nouveau NVN621

Sink Dimensions: 1160L x 460W mm
Bowl Dimensions: 340L x 370W x 149D mm
Cut-Out Dimensions: 1140L x 440W mm
Product Code: 1990002

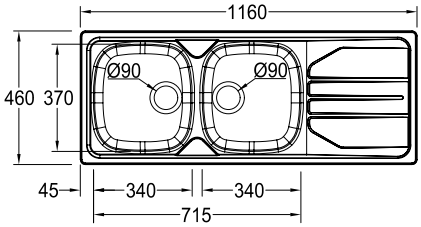

Projectline



Projectline PLN611

Sink Dimensions: 800L x 460W mm
Bowl Dimensions: 340L x 370W x 140D mm
Cut-Out Dimensions: 780L x 440W mm
Product Code: 1990030

25 YEARS WARRANTY

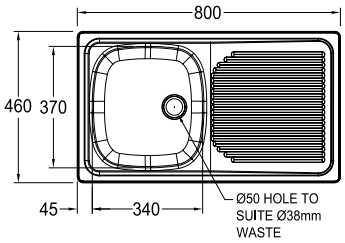



Projectline PLN621

Sink Dimensions: 160L x 460W mm
Bowl Dimensions: 340L x 370W x 140D mm
Cut-Out Dimensions: 1140L x 440W mm
Product Code: 1990031

25 YEARS WARRANTY

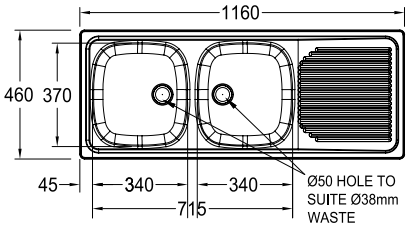

SUGGESTED ACCESSORIES FOR NEVADA, NOUVEAU AND PROJECTLINE



Stainless Steel Basket
Product Code:
1120004







Rondo RDX610-48

RDX610-48 mm (90mm Outlet with Tap Landing)
Sink Dimensions: 485Ø mm
Bowl Dimensions: 380Ø x 161D mm
Cut-Out Dimensions: Refer to template included with packaging.
Product Code: 1990010

RDX610-48 (90mm Outlet & Slotted Overflow and Tap Landing)
Sink Dimensions: 485Ø mm
Bowl Dimensions: 380Ø x 161D mm
Cut-Out Dimensions: Refer to template included with packaging.
Product Code: 1990011

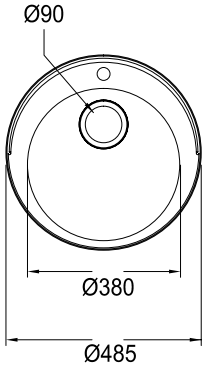

25 YEARS WARRANTY



Rondo RDX610-45

RDX610-45 (90mm Outlet)
Sink Dimensions: 450Ø mm
Bowl Dimensions: 380Ø x 161D mm
Cut-Out Dimensions: Refer to template included with packaging.
Product Code: 1990012

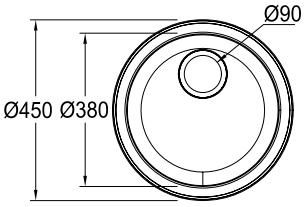

25 YEARS WARRANTY



Rondo RDX610-44

RDX610-44 (38mm Outlet)
Sink Dimensions: 450Ø mm
Bowl Dimensions: 415Ø x 157D mm
Cut-Out Dimensions: Refer to template included with packaging.
Product Code: 1990013

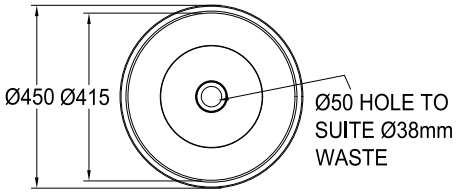

PLEASE NOTE:
RDX610-44 Prep Bowls are manufactured from Ferritic Stainless Steel and are not suitable for costal applications due to corrosion risk.

12 MONTHS WARRANTY



Rondo RDX610-34

RDX610-34 (38mm Outlet)
Sink Dimensions: 340Ø mm
Bowl Dimensions: 300Ø x 139D mm
Cut-Out Dimensions: Refer to template included with packaging.
Product Code: 1990014

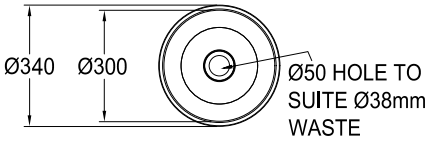

PLEASE NOTE:
RDX610-34 Prep Bowls are manufactured from Ferritic Stainless Steel and are not suitable for costal applications due to corrosion risk.

12 MONTHS WARRANTY

Undermount Bowls



NEW Aton



Aton ANX120

Sink Dimensions: 770L x 450W mm
Bowl Dimensions: 340L x 400W x 190D mm
Product Code: 1990139

25 YEARS WARRANTY

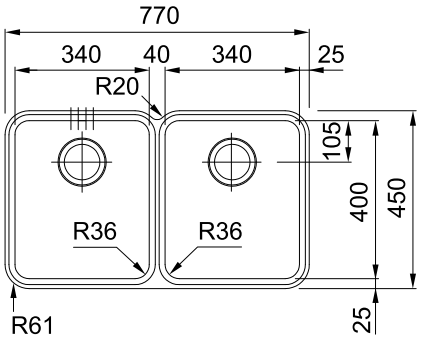

Selene

Manufactured in a satin/brushed finish



Selene SLX110-40

Sink Dimensions: 428Lx428W mm
Bowl Dimensions:400Lx400Wx190D mm
Cut-Out Dimensions: Please see template included in packaging.
Product Code: 1990095

25 YEARS WARRANTY

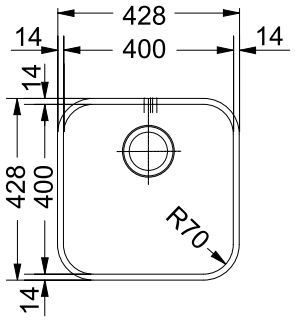

Smart Stainless Steel Bowls



STRAIGHT TO WHAT MATTERS

The Smart Range reflects adaptability, affordability, and functionality - designed to offer cohesive, modern style while easily fitting into a variety of kitchen layouts. Softer curves make cleaning a breeze and bring a touch of organic calm to your space. Your kitchen, your signature.





Seamless Compatibility

All sinks in the Smart Range are designed with uniform front-to-back measurements, allowing for seamless combination and layout flexibility. Whether you're installing a single or double bowl, or mixing different sizes side by side, the consistent dimensions ensure a streamlined fit and professional finish in any kitchen design.

NEW **Smart**



Smart SRX110-34

Sink Dimensions: 368L x 428W mm
Bowl Dimensions: 340L x 400W x 180D mm
Product Code: 1990145

25 YEARS WARRANTY

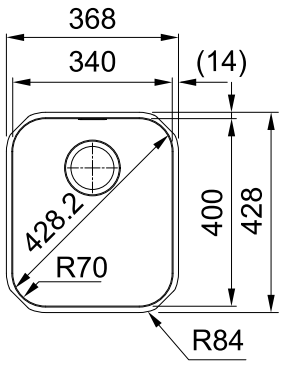

Smart NEW



Smart SRX110-40

Sink Dimensions: 428L x 428W mm
Bowl Dimensions: 400L x 400W x 190D mm
Product Code: 1990146

25 YEARS WARRANTY

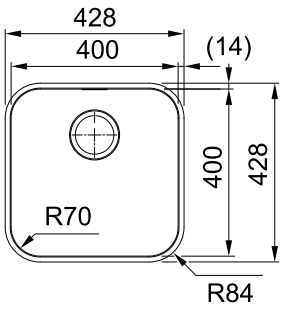



Smart SRX110-50

Sink Dimensions: 541L x 441W mm
Bowl Dimensions: 500L x 400W x 180D mm
Product Code: 1990138

25 YEARS WARRANTY

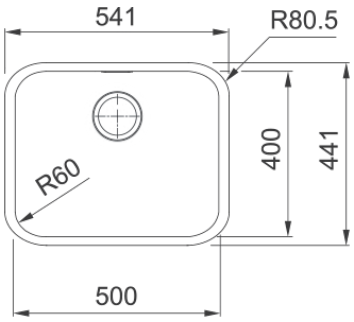



Smart SRX120-34-34

Sink Dimensions: 762L x 446W mm
Bowl Dimensions: 340L x 400W x 180D mm
340L x 400W x 180D mm
Product Code: 1990147

25 YEARS WARRANTY

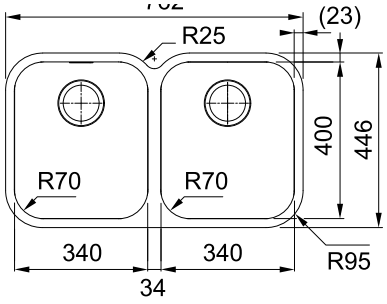



Maris Stainless Steel Bowls



THE MARIS STAINLESS STEEL BOWL IS VERY MINIMALIST

These five new minimalist sinks are made from matt brushed stainless steel. The Swiss-made Maris system comprises multiple elements that can be mixed and matched in any combination for perfect functionality and a harmonious look.





Brushed finish

Like all Franke sinks, the new matt brushed stainless steel sinks provide a tailor-made feel. The models come in variety of different sizes – from the extremely compact 190mm wide to the very spacious 700mm - bowl variant, designed for undermount installation.

Maris



Maris MRX110-19

Sink Dimensions: 230L x 440W mm
Bowl Dimensions: 190L x 400W x 130D mm
Product Code: 1990092

25 YEARS WARRANTY

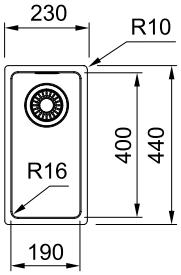



Maris MRX110-34

Sink Dimensions: 380L x 440W mm
Bowl Dimensions: 340L x 400W x 180D mm
Product Code: 1990094

25 YEARS WARRANTY

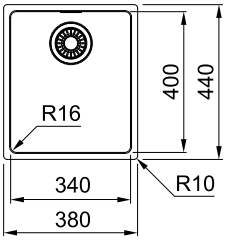

Maris



Maris MRX110-45

Sink Dimensions: 490L x 440W mm
Bowl Dimensions: 450L x 400W x 180D mm
Product Code: 1990091

25 YEARS WARRANTY

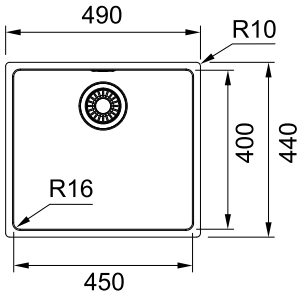



Maris MRX110-55

Sink Dimensions: 590L x 440W mm
Bowl Dimensions: 550L x 400W x 180D mm
Product Code: 1990090

25 YEARS WARRANTY

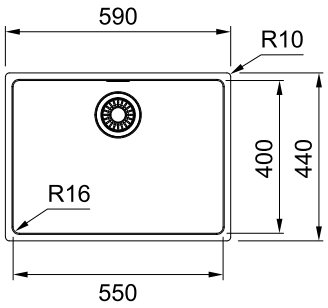



Maris MRX110-70

Sink Dimensions: 740L x 440W mm
Bowl Dimensions: 700L x 400W x 180D mm
Product Code: 1990093

25 YEARS WARRANTY

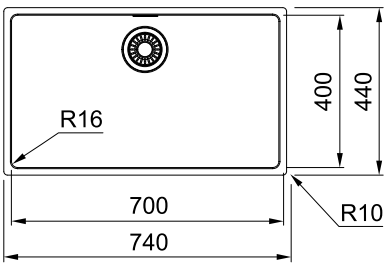



Cub130

Sink Dimensions: 190L x 310W mm
Bowl Dimensions: 160L x 280W x 126D mm
Cut-Out Dimensions: Refer to template included with packaging.
Product Code: 1990035

25 YEARS WARRANTY

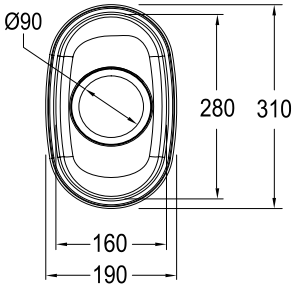



Cub150

Sink Dimensions: 390L x 455W mm
Bowl Dimensions: 345L x 410W x 140D mm
Cut-Out Dimensions: Refer to template included with packaging.
Product Code: 1990034

25 YEARS WARRANTY

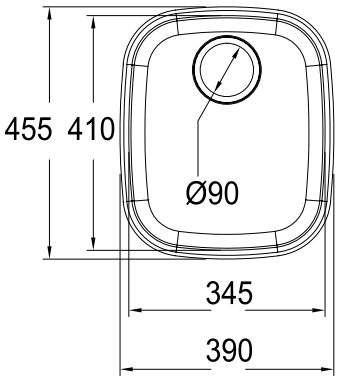

Drop on Sinks



PLEASE NOTE
Drop-on sinks do not include Waste Fittings.
38mm waste fitting sold separately.



PVC 38mm Waste & plug
Product Code: 1120017

SINGLE END BOWL - 460mm Wide



Trendline 711
800x460 SEB

Sink Dimensions: 800L x 460W mm
Bowl Dimensions: 340L x 370W x 140D mm
Product Code: 1030001

25 YEARS WARRANTY

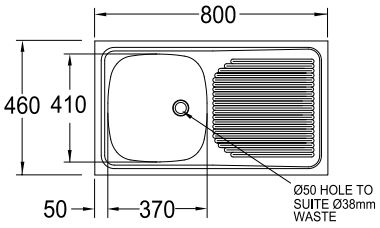

SINGLE END BOWL - 535mm Wide



Trendline 711
900x535 SEB

Sink Dimensions: 900L x 535W mm
Bowl Dimensions: 460L x 350W x 140D mm
Product Code: 1030002

25 YEARS WARRANTY

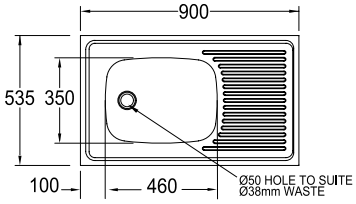



Trendline 711
1050x535 SEB

Sink Dimensions: 1050L x 535W mm
Bowl Dimensions: 460L x 350W x 140D mm
Product Code: 1030006

25 YEARS WARRANTY

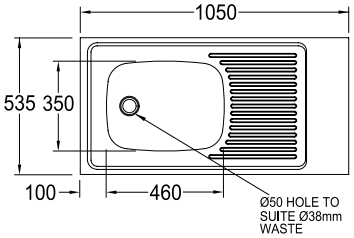

DOUBLE END BOWL - 535mm Wide



Trendline 721
1200x535 DEB

Sink Dimensions: 1200L x 535W mm
Bowl Dimensions: 410L x 343W x 140D mm
Product Code: 1030009

25 YEARS WARRANTY

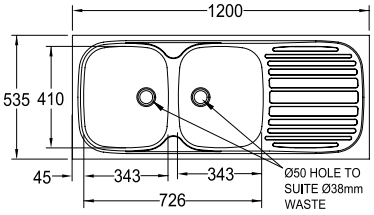

SINGLE CENTRE BOWL - 535mm Wide (Factory Orders Only)



Trendline 712
1200x535 SCB

Sink Dimensions: 1200L x 535W mm
Bowl Dimensions: 460L x 350W x 135D mm
Product Code: 1030007

25 YEARS WARRANTY

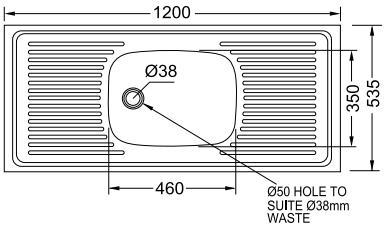

DOUBLE CENTRE BOWL - 535mm Wide



Trendline 722
1500x535 DCB

Sink Dimensions: 1500L x 535W mm
Bowl Dimensions: 343L x 410W x146D mm
Product Code: 1030010

25 YEARS WARRANTY

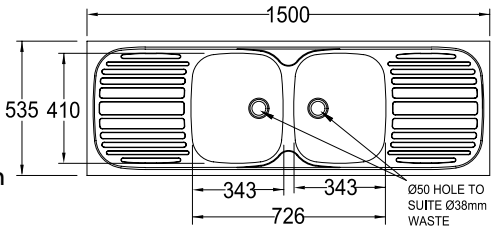



Trendline 722
1800x535 DCB

Sink Dimensions: 1800L x 535W mm
Bowl Dimensions: 343L x 410W x146D mm
Product Code: 1030011

25 YEARS WARRANTY

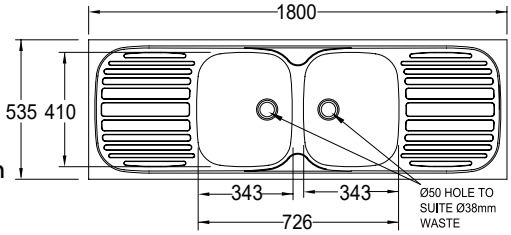

OPTIONAL FIXING BRACKETS



FALCON BRACKET FOR DROP-ON SINKS Falcon Brackets

(Patent No.95/4163)

Wall fixing brackets 440L x 280W mm to be manufactured from galvanised mild steel.

Dimensions: 440L x 280W mm
Product Code: 2120007 (Pair)

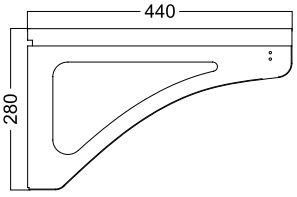

SA94

PLEASE NOTE
Drop-on sinks do not include Waste Fittings. 38mm waste fitting sold separately.



PVC 38mm Waste & plug
Product Code: 1120017





SA94

Sink Dimensions: 900L x 460W mm
Bowl Dimensions: 460L x 410W x 120D mm
Product Code: 1030004

10 YEARS WARRANTY

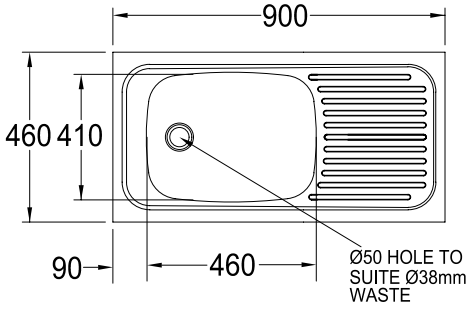

OPTIONAL FIXING BRACKETS



FALCON BRACKET FOR DROP-ON SINKS Falcon Brackets

(Patent No.95/4163)

Wall fixing brackets 440L x 280W mm to be manufactured from galvanised mild steel.

Dimensions: 440L x 280W mm
Product Code: 2120007 (Pair)

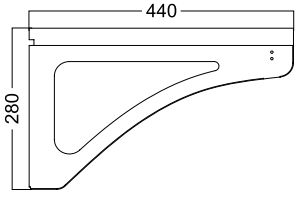



Taps



56 - 57	Tap Features
58 - 59	Lina Clear Water Filtration
60	Mythos Masterpiece Retractable
61	Atlas Neo Retractable
62	Maris Slim Professional
63	Lina L Swivel
64	Lina Semi Professional
65	Active
66 - 70	Other Taps
70	SD80 Soap Dispenser

Tap Features



WARRANTY

Franke chrome/stainless steel taps carry a 15 year warranty on the body construction for against manufacturing defects, with a 2 year guarantee on the cartridge. Coloured taps carry a 5 year warranty on the body construction for against manufacturing defects, with a 2 year guarantee on the cartridge. All warranties are subject to proper installation and exclude chips and scratches. Proof of purchase is required for all enquiries.



Cartridge Features

Noise suppressor of 17-18 decibels.
Anti-scald set for standard operation can be reset.
(Refer to registered plumber).
Endurance test of 70,000 cycles, complies with EN 814
International Standards.
Reduced flow rate for green rating.
Suitable for balanced water pressure of 200 - 600kPa.





Braided Connectors:

Stainless Steel braiding



Cross-linked inner hose
Brass nuts – ½ inch/15mm
or
Brass nuts – ⅜ inch/10mm

Smart Lime Cleaning Aerator:*

Smart Lime Resistance – maximising the lifespan of the aerator
No need to disassemble the aerator for cleaning – simply rub the lime away using your finger.
Perfect stream quality even under difficult flow conditions
Very low noise level.
High quality, the Smart Lime Cleaning Aerator cannot be crushed.
Integrated anti-clogging dome screen - filters sediments and particles.

*Applicable to certain models



NEW

Lina
Clear Water 2.0

Pure, fresh filtered water every day.









Lina Clear Water 3-way filter tap provides pure water thanks to a special two-stage process, which removes heavy metals and sediments down to 0.2 microns,



Product Code: 1990155
Finish: Black



Product Code: 1990154
Finish: Chrome

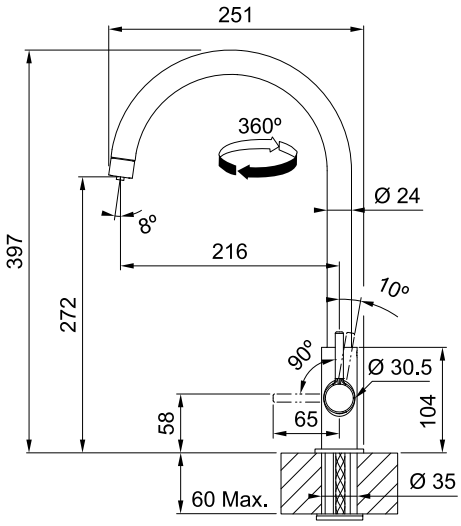

Water purification filter for filtered water.
0.2 Micron Filtration.
Carbon activated cartridge.
Solid brass construction.
4C² Filter with 11,350 L capacity**
Connection type: G 3/8 " connection
Flowrate: 7.5L per minute.
Filtration Flowrate: 2.8L per minute.

5 YEARS WARRANTY on body construction for black

15 YEARS WARRANTY on body construction for chrome

2 YEARS WARRANTY on ceramic cartridge



Replacement Cartridge
Product Code: 1330195

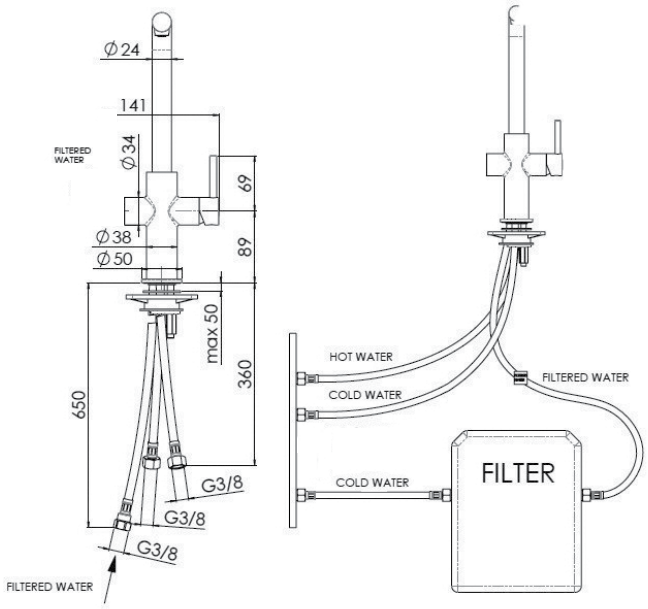

NEW

Mythos Masterpiece Retractable

Tap into art.



Made with functional design, elegant style and maximum attention to detail, the new Mythos Masterpiece taps are the perfect complement to your Franke kitchen. Available in three different metallic colours, Anthracite, Gold and Copper.







The Mythos Masterpiece Retractable Tap brings together elegant design and everyday practicality. Crafted from premium materials, it features a smooth swivel spout and a retractable spray head for easy rinsing and cleaning. With precise side lever control and a water- efficient design, this tap adds both style and convenience to your kitchen.



Product Code: 1150065
Finish: Stainless Steel with a Copper PVD coating
Type: Professional, features an adjustable and retractable hose.



Product Code: 1150066
Finish: Stainless Steel with a Gold PVD coating
Type: Professional, features an adjustable and retractable hose.



Product Code: 1150064
Finish: Stainless Steel with an Anthracite PVD coating
Type: Professional, features an adjustable and retractable hose.



Product Code: 1150063
Finish: Stainless Steel
Type: Professional, features an adjustable and retractable hose.

Features a dual-spray function (jet and shower) for versatile use.
Comes with a long, black nylon extendable hose, offering significant reach for rinsing and cleaning.
Strong, durable & anti-corrosive satin 304 stainless steel with PVD coated surface.
Water efficient 7.75L per minute flowrate.

15 YEARS WARRANTY on body construction for chrome

2 YEARS WARRANTY on PVD coating

2 YEARS WARRANTY on ceramic cartridge

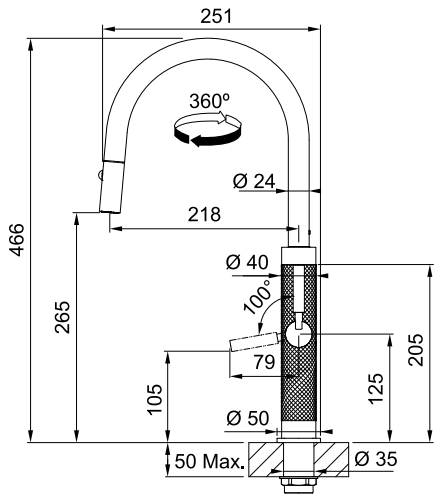

NEW

Atlas Neo Retractable

Modern functionality, bold design.





The Atlas Neo Retractable Tap brings modern functionality and bold design to your kitchen. Its sleek finish makes a confident style statement, while the retractable spray offers added reach and control for everyday tasks. Built from durable stainless steel, it's made to perform and built to last.



Product Code: 1150053
Finish: Stainless Steel with a Copper PVD coating
Type: Swivel with a retractable hose



Product Code: 1150052
Finish: Stainless Steel with a Gold PVD coating
Type: Swivel with a retractable hose

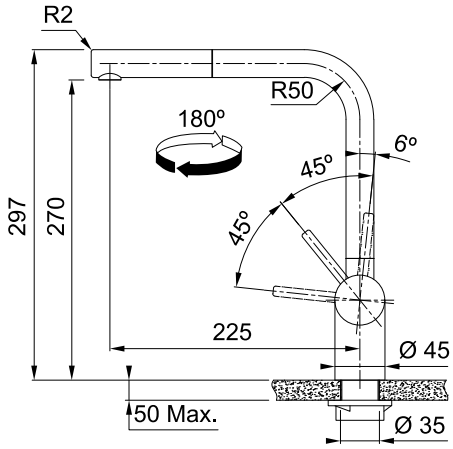

Retractable spray feature.
Durable & anti-corrosive satin 304 stainless steel with PVD coated surface.
Water efficient 8.94L per minute flowrate.

15 YEARS WARRANTY on body construction for chrome

2 YEARS WARRANTY on PVD coating

2 YEARS WARRANTY on ceramic cartridge

NEW

Maris

Slim Professional

A slim tap for the heart of your home.



Experience the perfect blend of minimalist design and eco-conscious innovation with the new Franke Maris Slim Semi Professional Taps. Designed to elevate your kitchen's style and functionality, these taps make food preparation effortless and cleanup a breeze.



An Eco Friendly Design

Its slim profile and refined handle offer a minimalist charm, while the stepped lever of the ECO Cartridge in the taps is designed to potentially reduce water usage by up to 50%, making it an environmentally friendly choice. The laminar aerator fitted in the spout ensures the taps deliver a crystal clear, non-splashing water stream, with very little noise, making clean up easier after daily cooking.

Durable One-Piece Handle Design

Exceptional durability, easy cleaning, and a smooth look, the one-piece handle design helps to strengthen the integrity and ultimately extend the lifespan of your tap.



Product Code: 1150061
Finish: Matt Black
Type: Semi Professional



Product Code: 1150058
Finish: Chrome
Type: Semi Professional

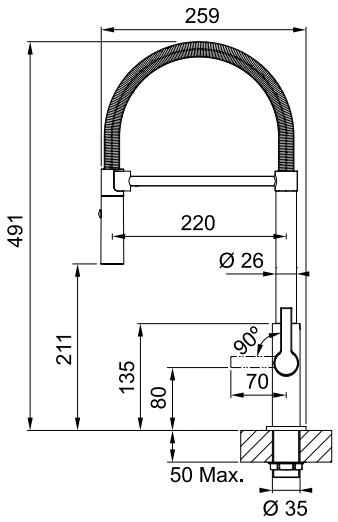

*Water saving 2-Step cartridge.
Pull-out or pull-down spray head with a dual-jet (stream/spray) function for easy rinsing and filling.
2-Step tap cartridge saves water by creating a gentle pause halfway when you turn the handle, encouraging lower flow unless you deliberately push past it for full water pressure.
Water efficient 8.40L per minute flowrate.

5 YEARS WARRANTY on body construction for black

15 YEARS WARRANTY on body construction for chrome

2 YEARS WARRANTY on ceramic cartridge

NEW

Lina L Swivel





Product Code: 1150062
Finish: Matt Black powder coating
Type: Swivel



Product Code: 1150059
Finish: Chrome
Type: Swivel

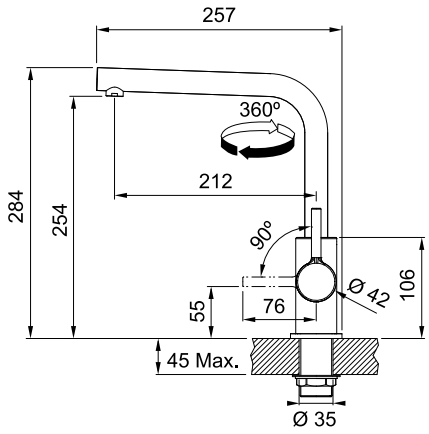

Suits smaller kitchen sinks with a compact, angular design.
Water efficient 9.80L per minute flowrate.

5 YEARS WARRANTY on body construction for black

15 YEARS WARRANTY on body construction for chrome

2 YEARS WARRANTY on ceramic cartridge

Lina Semi-Professional





Product Code: 1150049
Finish: Black and Chrome

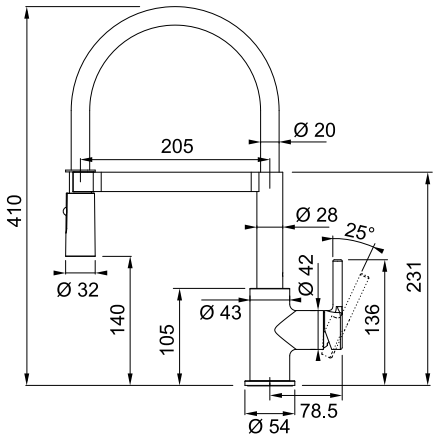

Water efficient 12L per minute flowrate.
Connection dimension: DN 10
Connection type: G 3/8 " connection

15 YEARS WARRANTY on body construction

2 YEARS WARRANTY on ceramic cartridge



The detachable dual spray makes easy work of most cleaning challenges. Whether it's bulky baking trays, filling large pots or cleaning the sink itself, it's no longer a problem.

And with the addition of a magnetic fixation feature the detachable hose always goes back to looking neat and tidy.

Active





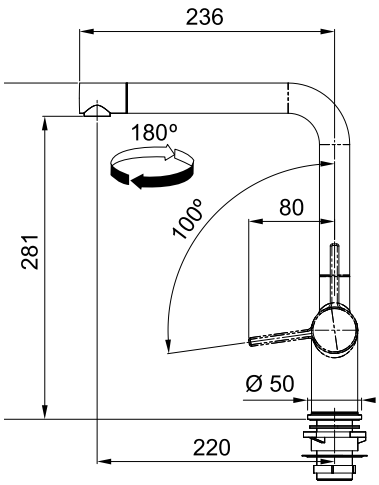

Product Code: 1150045
Finish: Black

Solid Brass Construction
Ceramic Disk Cartridge
Colour matched to Fragranite range
180 Degree Spout Swivel
Water efficient 12L per minute flowrate.
Connection dimension: DN 10
Connection type: G 3/8 " connection

5 YEARS WARRANTY on body construction

2 YEARS WARRANTY on ceramic cartridge

Other taps

Saturn Professional



Stainless Steel

Product Code: 1150050
Finish: Stainless Steel
Type: Professional

Strong, durable & anti-corrosive satin 304 stainless steel surface.
Ceramic Disk Cartridge with anti-scald.
Water efficient 12L per minute flowrate.
Connection dimension: DN 15.
Connection type: G 1/2 " connection.

15 YEARS WARRANTY on body construction

2 YEARS WARRANTY on ceramic cartridge

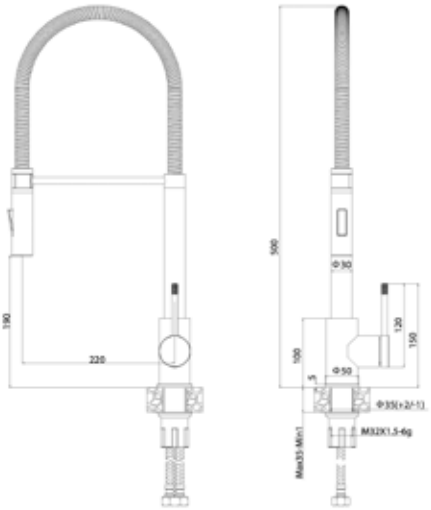

Saturn Retractable



Stainless Steel

Product Code: 1150054
Finish: Stainless Steel
Type: Professional, Features an adjustable, retractable nozzle.

Strong, durable & anti-corrosive satin 304 stainless steel surface.
Ceramic Disk Cartridge with anti-scald.
Water efficient 12L per minute flowrate.
Connection dimension: DN 15.
Connection type: G 1/2 " connection.

15 YEARS WARRANTY on body construction

2 YEARS WARRANTY on ceramic cartridge

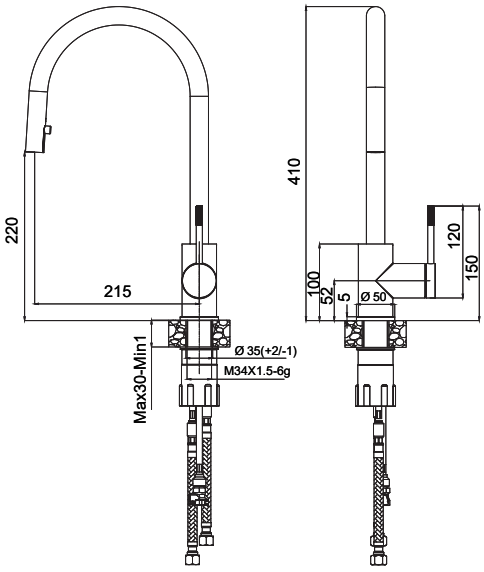



Saturn Cube



Stainless Steel

Product Code: 1150036
Finish: Stainless Steel

Strong, durable & anti-corrosive satin 304 stainless steel surface.
Ceramic Disk Cartridge with anti-scald.
Water efficient 12L per minute flowrate.
Connection dimension: DN 15
Connection type: G 1/2 " connection.

15 YEARS WARRANTY on body construction

2 YEARS WARRANTY on ceramic cartridge

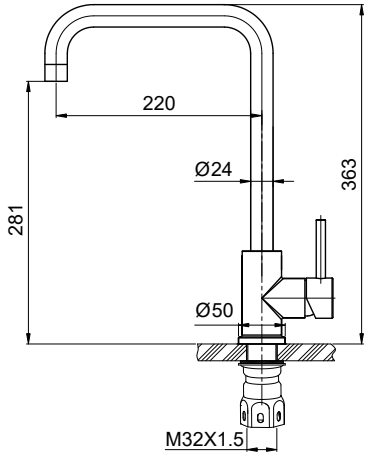

Saturn Arc



Stainless Steel

Product Code: 1150037
Finish: Stainless Steel

Strong, durable & anti-corrosive satin 304 stainless steel surface.
Ceramic Disk Cartridge with anti-scald.
Water efficient 12L per minute flowrate.
Connection dimension: DN 15
Connection type: G 1/2 " connection.

15 YEARS WARRANTY on body construction

2 YEARS WARRANTY on ceramic cartridge

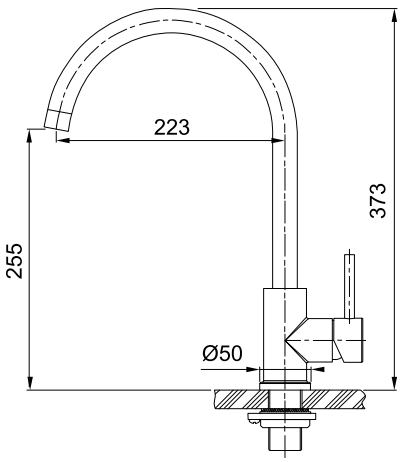

Cascade Professional



Product Code: 1150020-002
Finish: Chrome with a black tube

Ceramic Disk Cartridge with anti-scald.
Water efficient 12L per minute flowrate.
Solid DZR brass construction.
Connection dimension: DN 15
Connection type: G 1/2 " connection.

15 YEARS WARRANTY on body construction

2 YEARS WARRANTY on ceramic cartridge

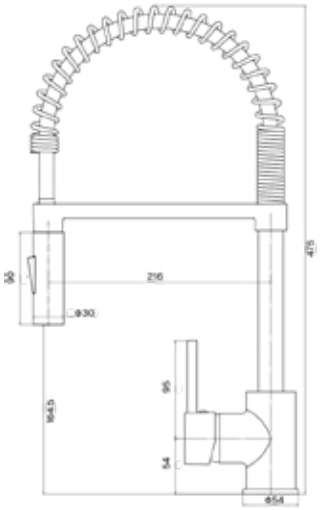

Flowline



Stainless Steel

Product Code: 1150068
Finish: Stainless Steel

Ceramic Disk Cartridge with anti-scald.
Water efficient 12L per minute flowrate.
Connection dimension: DN 15
Connection type: G 1/2 " connection.

15 YEARS WARRANTY on body construction

2 YEARS WARRANTY on ceramic cartridge

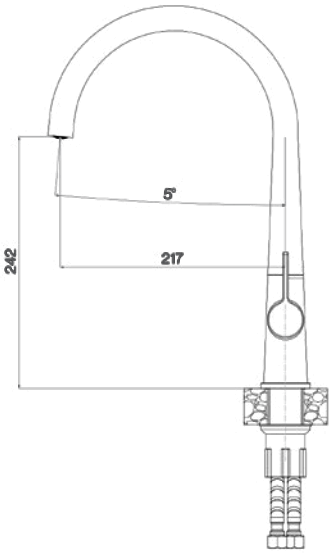

Flowline Matt Black



Product Code: 1150069
Finish: Matt Black

Ceramic Disk Cartridge with anti-scald.
Water efficient 12L per minute flowrate.
Connection dimension: DN 15
Connection type: G 1/2 " connection.

5 YEARS WARRANTY on body construction

2 YEARS WARRANTY on ceramic cartridge

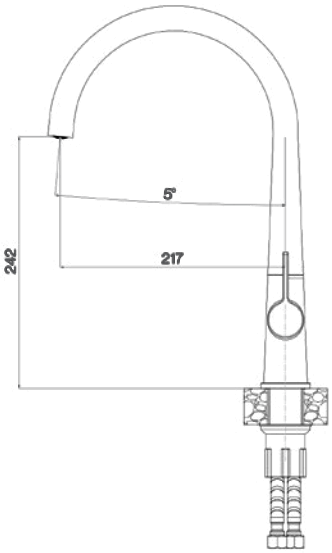

Highrise



Product Code: 1150019
Finish: Chrome

Ceramic Disk Cartridge with anti-scald.
Water efficient 12L per minute flowrate.
Smart Lime Cleaning Aerator.
Connection dimension: DN 15
Connection type: G 1/2 " connection.

15 YEARS WARRANTY on body construction

2 YEARS WARRANTY on ceramic cartridge

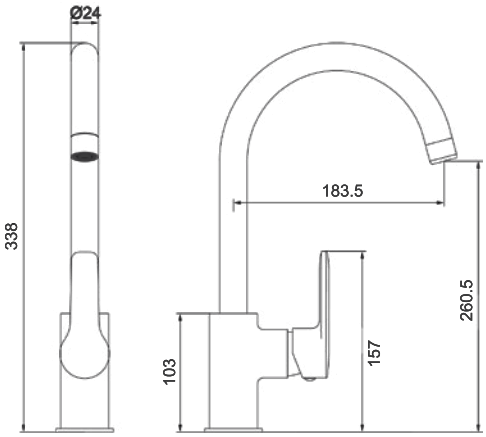

Highrise Matt Black



Product Code: 1150043
Finish: Matt Black

Ceramic Disk Cartridge with anti-scald.
Water efficient 12L per minute flowrate.
Smart Lime Cleaning Aerator.
Connection dimension: DN 15
Connection type: G 1/2 " connection.

5 YEARS WARRANTY on body construction

2 YEARS WARRANTY on ceramic cartridge

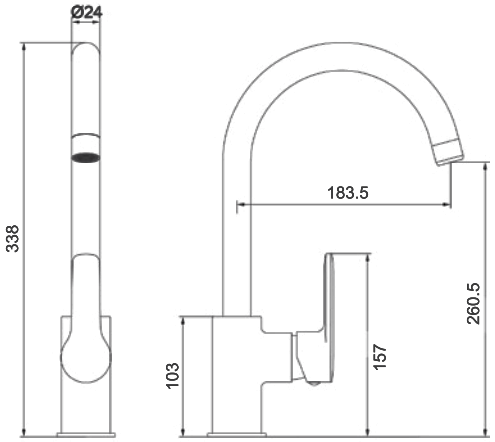

Capella Wall Mounted



Stainless Steel

Product Code: 1150056
Finish: Stainless Steel

Ceramic Disk Cartridge with anti-scald.
Water efficient 12L per minute flowrate.
Connection dimension: DN 15
Connection type: G 1/2 " connection.

5 YEARS WARRANTY on body construction

2 YEARS WARRANTY on ceramic cartridge

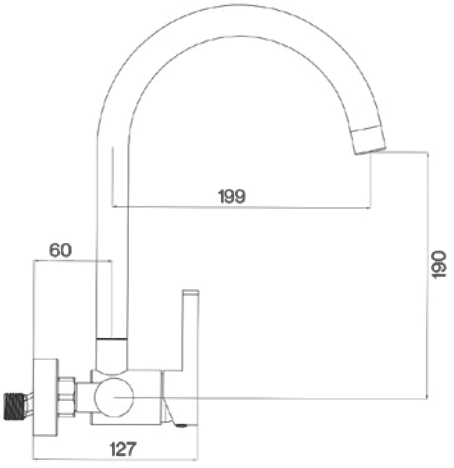

Projectline V2



Product Code: 1150021-002
Finish: Chrome

Strong, durable & anti-corrosive satin
Ceramic Disk Cartridge with anti-scald.
Water efficient 12L per minute flowrate.
Connection dimension: DN 15
Connection type: G 1/2 " connection.

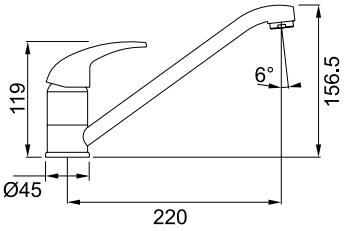

15 YEARS WARRANTY on body construction

2 YEARS WARRANTY on ceramic cartridge

SD80 Soap Dispenser



Product Code: 2120059

Manufactured from chromium plated brass
Incorporates a refillable 1 Litre polyethylene container for use with liquid soap
12 Month Warranty on Body Construction

12 MONTHS WARRANTY

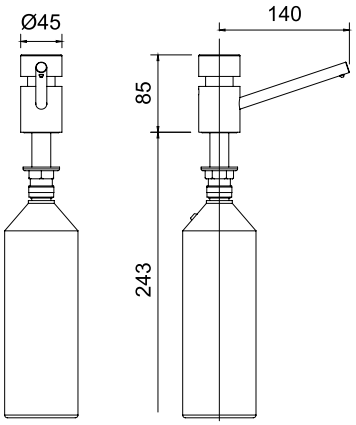

Waste Management and Access

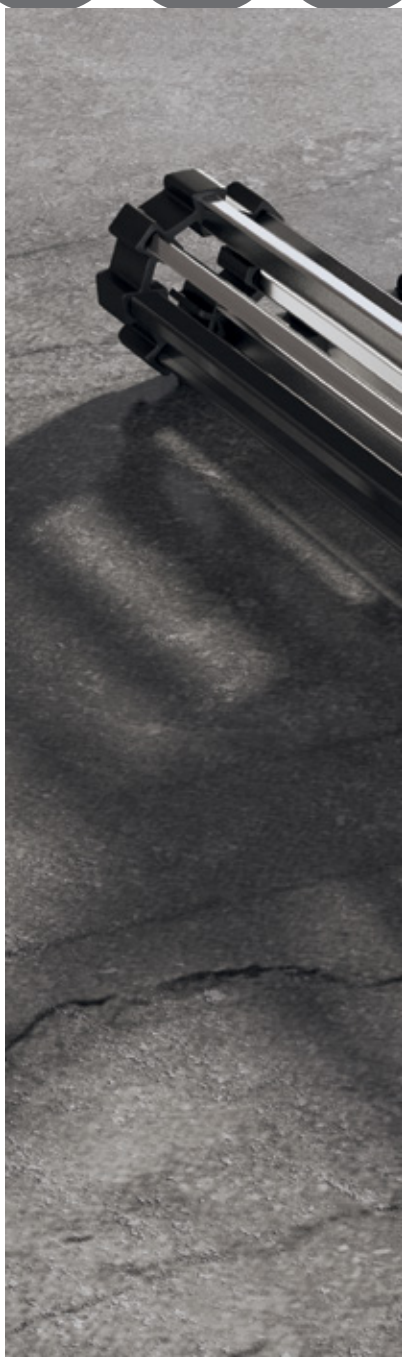

76 Waste Disposer

77 Plumbing Kits

78 Stainless Steel Roll Mat

79 Accessories and Waste Fittings

nent System
sories



Waste Disposer



Franke Turbo Plus TP-75 Waste Disposal Unit



Product Code: 1340005 with Air Switch

Stainless steel grinding components
Professional 3-bolt mounting system
High Torque dual magnetic motor
3/4HP, 2700 RPM motor
Integrated Air Switch
Sound insulated shell
Easy to install
Continuous feed

Franke Turbo Plus TP-75
Waste Disposal Unit

Electrical Certification: IEC 60 335-2-16

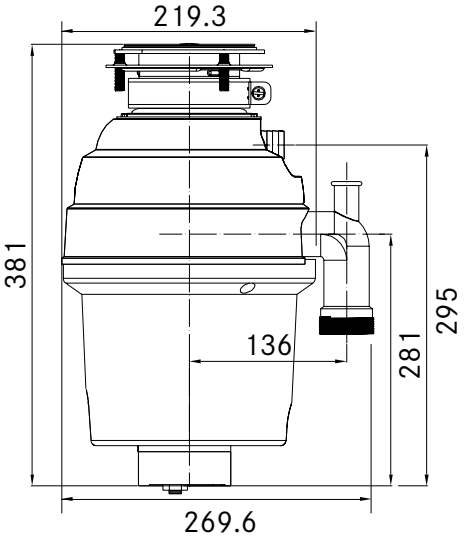

24 MONTHS WARRANTY

Plumbing Kits

Franke Spazi plumbing kits are designed to assist in optimising the underside of the cabinet space and in many cases provide for better utilisation of under-sink storage.

Franke Spazi plumbing kits are made from rigid grey polypropylene and are the ideal hygienic solution to a Franke sink waste system. Spazi plumbing kits have a manifold with an incline and an air vent for faster water disposal. The relevant plumbing kit is shown with each sink throughout this brochure.



Spazi F/1
Single Bowl
Product Code: 1120008



Spazi F/2
Double Bowl
Product Code: 1120009



Spazi Conversion
(2 to 3) & Spares Kit
Product Code: 1120094

Inset Bin





Stainless Steel Lid and 12 Litre Synthetic Bin

The Inset Waste Bin sits neatly in the countertop so food waste can be quickly and hygienically disposed of, while maintaining a minimalistic look.

Product Code: 1340003

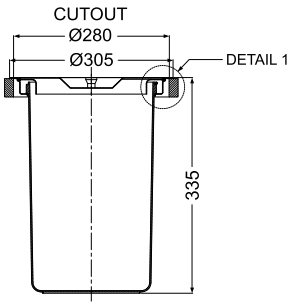

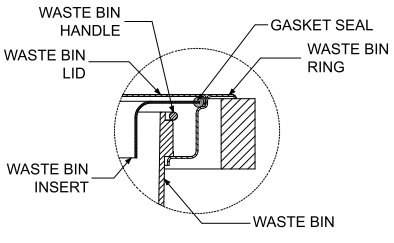

DETAIL 1

Stainless Steel Roll Mat

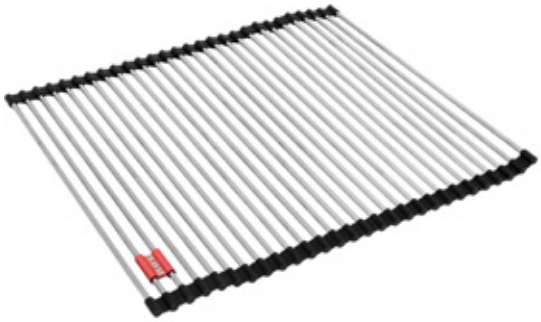

Stainless Steel Roll Mat

Product Code: 1120190

Universal Stainless Steel Roll Mat RM44.
Stainless steel bars and black neopren connection.
Overall size 440L x 468W.
Sink accessory to be used over your Franke sink as a drainer.
Alternatively you can use it as a trivet for hot pans.
Rubber edge holds Roll Mat firmly in place and can be easily rolled up and stored away when not in use.





Looking for something to make lighter work of kitchen chores?

Our Franke Roll Mat multi-use accessory is bound to make all your kitchen tasks that bit easier, whether that's drying your pots or washing fruit. Use over the countertop or across your sink.



12 MONTHS WARRANTY

It's the little things that make life extra special, so we've created a range of extras to do just that. People use their sinks in different ways, so these correspond to common kitchen activities and complement the design of your Franke sink.

Accessories

General Accessories



Tap Brace
Optional extra to be used to reinforce heavy duty and/or taller taps.
Product Code: 1330007



Inox Cream
250mls Tube
Cleans, shines, polishes and revitalises stainless steel.
Product Code: 1120047



Tap Hole Stopper
Product Code: 1330008

Waste Fittings

90mm Basket Strainer Waste Fitting (BSW)
*Colour of the base may vary
Product Code: 1120001





Basket Strainer Waste Plug For 90mm BSW Fitting
Product Code: 1120029

50mm Basket Strainer Waste Fitting (BSW)
Product Code: 1120096





90mm Designer Basket Strainer Waste Fitting (BSW): 1120139



90mm Designer Basket Strainer Waste Plug: 1120138

38mm Waste Fitting & PVC Plug With Handle
Product Code: 1120017





38mm Plug only
Product Code: 1120162

Wash Troughs

5 YEARS WARRANTY



DLX101 Fabricated Single Wash Trough with 90mm Designer Waste Fitting included

Dimensions: 600L x 440W mm
Bowl Dimensions: 540L x 410W x 300D mm
Cut-Out Dimensions: 582L x 482W
Product Code: 2990056

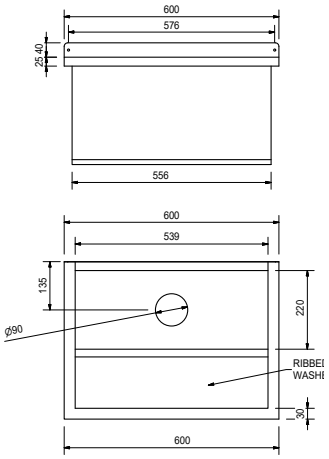



DLT Luxtub Inset Type Wash Trough with 90mm Designer Waste Fitting included

Dimensions: 600L x 500W mm
Bowl Dimensions: 525L x 425W x 230D mm
Cut-Out Dimensions: 582L x 482W
Product Code: 2990054

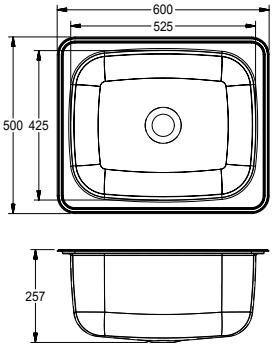



LDL Luxtub Wall Mounted/Drop-On Wash Trough 90mm Designer Waste Fitting included

Dimensions: 600L x 500W mm
Bowl Dimensions: 525L x 425W x 230D mm
Product Code: 2990055

Falcon Brackets (optional)
2120007 (Pair)



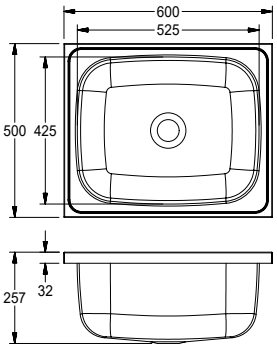



SIRX Washtrough Inset or wall mounted type

Dimensions: 500L x 450W mm
Bowl Dimensions: 450L x 400W x 240D mm
Product Code: 2560003

WALL MOUNTED
Dimensions: 500L x 450W mm
Bowl Dimensions: 450L x 400W x 240D mm

SIRX Brackets 2120014 (Pair)



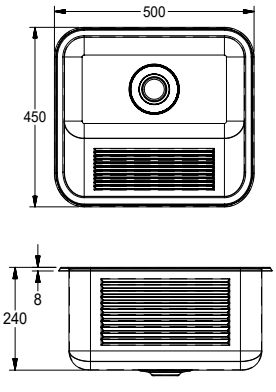

12 MONTHS
WARRANTY

PLEASE NOTE:
Economy Washtroughs are manufactured from Ferritic Stainless Steel and are not suitable for commercial or coastal applications due to corrosion risk.

*Only reccomended for domestic use
*Waste Fittings are not included

Economy Wash Troughs



ET101
Fabricated Single Wash Trough

Dimensions: 540L x 430W mm
Bowl Dimensions: 485L x 395W x 300D mm
Product Code: 2560006

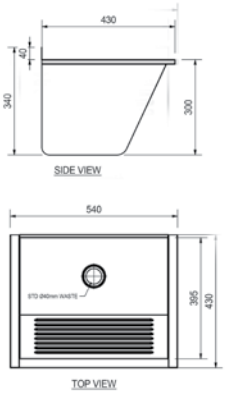



ET102
Fabricated Double Wash Trough

Dimensions: 1030L x 430W mm
Bowl Dimensions: 485L x 395W x 300D mm
Product Code: 2560005

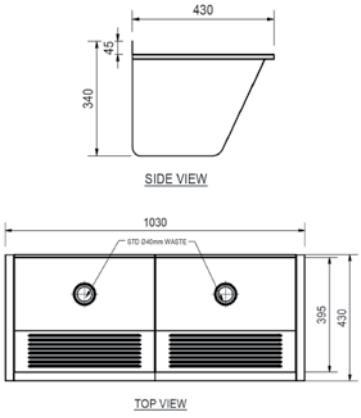



ET103
Fabricated Single Mini Wash Trough

Dimensions: 540L x 370W mm
Bowl Dimensions: 483L x 330W x 240D mm
Product Code: 2560007

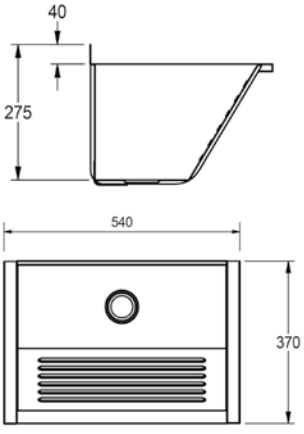

Cleaning & Maintenance

Cleaning Instructions for Franke Stainless Steel Range of Sinks

INOX CREAM

Product Code: 1120047

250g Inox Cream: cleans, shines, polishes and revitalises Stainless Steel



Cleaning procedure

Clean the Stainless Steel as often as experience dictates (i.e. when noticeably dull or dirty) and use the simplest cleaning procedure that will effectively "do the job".

- Stainless Steel reacts best to clean water or mild detergent solution, applied with a soft cloth or sponge, rinsed well and wiped dry.
- Routine, simple, gentle and inexpensive cleaning will retain both the corrosion resistance and appearance of Stainless Steel through years of exposure and use. Occasionally a small amount of Inox Cream may be used on a soft, damp cloth with the detergent solution to remove stubborn dirt or slight incipient stains. Rub gently.

Cleaning do's

- Employ regular routine cleaning rather than an occasional aggressive single cleaning.
- Only use propriety brands of cleaners that state "SUITABLE FOR STAINLESS STEEL", such as Inox Cream.
- Always rinse and dry as the final step in a cleaning procedure.

Cleaning don'ts

- Do not use coarse abrasive powders.
- Do not use metallic scourers or brushes with metal bristles.
- Do not use the so termed "silver cleaners".
- Do not use acids (except nitric acid in specific instances).

Storage of products

Product research has proven that certain household products which are commonly stored underneath a sink, will lead to damage of the sink's base. Chlorine is the major culprit and can be found in: chlorine for swimming pools; household bleach; bathroom cleaning products such as toilet cleaners, mildew treatments and tile cleaners; kitchen cleaning products - especially liquid cleaners; powders for dishwashers and laundry detergents. Preserve the life and beauty of your sink by storing these products away from the sink area in a well ventilated cupboard that is preferably child-proof. Storing these products under your sink will void your warranty.

WARNING



Do not store detergents & chemicals under sink

The space under your kitchen sink is not only dangerously accessible for children and pets, but harsh chemicals like toilet cleaners, detergents and chemicals can cause even the highest grade of stainless steel sink to corrode. We recommend storing your cleaning products on the top shelf of a laundry room, in your garage or in a well-ventilated locked closet.

HOW TO DRILL A TAP HOLE IN STAINLESS STEEL

When drilling a tap hole DO NOT use a hole saw as this will damage the sink and could cause rust spots from the mild steel hole saw. The correct method is to make the tap hole in your sink is to use a chassis punch.

Scan this QR code to see how to drill a tap hole.



Cleaning Instructions for Franke Fragranite Range of Sinks

Cleaning procedure for normal everyday cleaning

1. When you are finished using your sink, wipe the sink using a sponge (available in most supermarkets) and water and dry off with a soft cloth, or

2. Clean the sink using a normal detergent and soft cloth, rinse with water and dry with a soft cloth

For more stubborn stains

1. Follow steps 1 or 2 above to remove any film on the surface of the sink

2. Apply a cream cleaner and clean the sink using a scourer sponge (cleaning in circular motions). When using the scourer sponge use considerable force

Suggestion to prevent limescale staining returning after cleaning

Whilst this is not something we have tried in house there are suggestions from various users on the internet to clean the sink thoroughly with washing up liquid or a cream cleaner, rinse well dry off with a cloth. Apply a little baby oil to a clean dry cloth and rub over the sink surface. Initially this was repeated for a few days, thereafter every couple of months. It is important to wipe the sink down after use to prevent a further build up of stains.

Alternative Solutions to Removing Stains that have been used in the past.

a) Dilute a dishwasher tablet in a bowl of very hot water, 3/4 fill the sink bowl with very hot water, add the dishwater solution to the sink and leave for a few hours.

b)

1. Fill both bowls with a solution of warm water diluted with bleach (A cup full of bleach in around 10 litres of water). DO NOT ALLOW RAW BLEACH TO COME IN CONTACT WITH THE SINK. This should be left for a few hours, tannins will generally bleach out.
2. Following this the entire sink surface needs to be scoured vigorously with a scotchbrite pad and cream cleaner, this will not be a quick fix and may need to be carried out a few times to remove the surface deposits.
3. Do not use raw bleach (either to clean the sink or let it soak in the sink).

c) Mix 1 part of vinegar with 3 parts of water and apply and leave overnight.

Additional Information

Strong alkalis like ammonia and caustic soda, caustic paint strippers, paint brush cleaners and neat chemical descaling agents should be kept away from your sink, as prolonged exposure to them may dull the surface.

Plastic washing up basins should not be used with the sink as small particles of the plastic basin may wear and become embedded into the surface of the sink causing a discolouration effect. Your sink can withstand high temperatures for a short period of time without marking. However, it is better to avoid putting very hot pans directly onto the sink for prolonged periods as the pans may leave a mark on the surface of the sink.

(rubbing hard on the surface of then sink). Work on this for a few minutes (sometimes it can take longer to remove really stubborn stains). On completion rinse the sink with water and dry with a soft cloth. (Do not use a steel wool in place of a scourer sponge as minute particles of the steel wool may become embedded in the surface of the sink).

If the stain is still visible after the above

1. Apply a limescale remover per manufacturer's instructions and clean the sink using a scourer sponge (cleaning in circular motions). When using the scourer sponge use considerable force (rubbing hard on the surface of then sink). Sometimes it takes more than one application to remove really stubborn stains.

On completion rinse the sink with water and dry with a soft cloth. (This is what we recommend for hard water areas where limescale forms on the surface of the sink, but it may be used for other types of stubborn staining).

The products mentioned above are also the standard products we would recommend for cleaning granite composite sinks on an ongoing basis.

Cleaning don'ts

- Do not use brushes with metal bristles or steel wool.
- Do not use acids.
- Do not use drain cleaner in your sink.
- Do not dispose of any building waste or use any contractor cleaning products in your sink. * Please ensure that when renovating, that your sink is properly covered and protected from all building material and contractor cleaning products.

Storage of products

Product research has proven that certain household products which may be stored underneath a sink, can lead to damage of the sink's base. Chlorine is the major culprit and can be found in: chlorine for swimming pools; household bleach; bathroom cleaning products such as toilet cleaners, mildew treatments and tile cleaners; kitchen cleaning products - especially liquid cleaners; powders for dishwashers and laundry detergents. Preserve the life and beauty of your sink by storing these products away from the sink area in a well ventilated cupboard that is preferably child-proof.

HOW TO DRILL A TAP HOLE IN FRAGRANITE

The correct method is to make the tap hole in your sink is to use a diamond drill bit.

A diamond drill bit is supplied with the Ronda prep bowl range as well as the Maris double bowl sinks.

Scan this QR code to see how to drill a tap hole into your Fragranite Sink.

Warranties

FRAGRANITE SINKS
10 years against manufacturing defects.

STAINLESS STEEL DOMESTIC KITCHEN SINKS
25 years against corrosion from date of purchase (*except SA94 sink).

STAINLESS STEEL SA94 SINK
10 years against manufacturing defects.

ACCESSORIES
(Waste Fittings, Cutting boards, Baskets etc):
1 year against manufacturing defects.

WASTE DISPOSERS
2 years against manufacturing defects.

KITCHEN TAPS
Chrome/Stainless Steel Taps
Body – 15 years against manufacturing defects; Cartridge - 2 years against manufacturing defects.

Coloured Taps
Body – 5 years against manufacturing defects; Cartridge - 2 years against manufacturing defects.
**Excludes chips and scratches on coloured taps.

WASH TROUGHS
5 years against corrosion from date of purchase (*except Economy Wash Trough).

ECONOMY WASH TROUGH & ECONOMY PREP BOWLS
12 months against manufacturing defects.

Find our full Warranty Policy on our Franke South Africa website www.franke.co.za under Support.

☎ 031 001 5000
KS-aftersales.za@franke.com

DISCLAIMER
The information and dates supplied in this brochure are based on the information believed to be reliable, however are not binding and inaccuracies may occur.
Franke reserves the right to change Specification and design at any time without notice.

© 2026 by Franke South Africa. All rights reserved under the Copyright Act of 1987 with the amendments. Reproduction of any of the content, full or partial, is allowed only with prior written approval of Franke South Africa. No reasonable requests will be refused provided the conditions as laid out are met.



FRANKE SOUTH AFRICA

CALL CENTRE
Tel 031 001 5000

HS-enquiry-fsa.za@franke.com
www.franke.co.za

DURBAN
1194 South Coast Road,
Mobeni, Durban, 4092.
South Africa
Tel +27 31 450 6300

GAUTENG
82 Morkels Close,
Unit B, Capital Hill
Halfway House
Midrand,1685
South Africa

CAPE TOWN
9 Silver Street
Northgate Business Park,
Northgate Estate,
Cape Town, 7405
South Africa